6' CONCRETE "T" WALL WITH PUSHOFF SLAB

CONDITIONS OF USE

BACKFILL: 6 FEET
MACHINERY LOADING CONDITIONS: EQUIPMENT ON PUSHOFF SLAB
CONCRETE STRENGTH: 3500 PSI
REBAR: GRADE 60

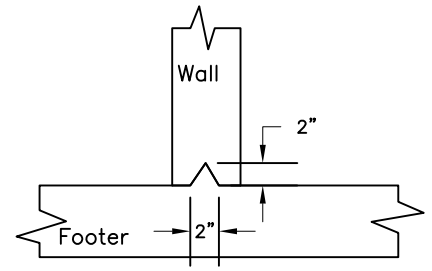

Construction Joint Detail

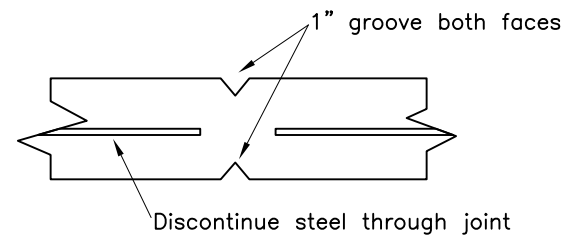

Place Joints at 20' Spacing

Wall Joint Detail

Concrete construction and related materials and equipment shall be in accordance with Maine Construction Specification 432, Structural concrete and Steel Reinforcement with the following exception; the concrete must have a minimun strength of 3500 psi at 28 days

STEEL SCHEDULE (GRADE 60)

MARK	SIZE	TYPE	R	S	LENGTH
A	#4	STR	---	---	5'–5"
B	#5	2	3'–6"	10"	4'–4"
C	#5	STR	---	---	5'–2"
D	#5	STR	---	---	
E	#4	STR	---	---	
N	#4	2	2'–0"	2'–0"	4'–0"

STEEL DETAILS

BAR SIZE	BEND DIAMETER (D) INCHES	SPLICE LENGTH INCHES (MIN.) *
#4	3	22
#5	3–3/4	28

* IF TWO BARS OF DIFFERENT DIAMETER ARE SPLICED, USE THE LONGER SPLICE LENGTH.

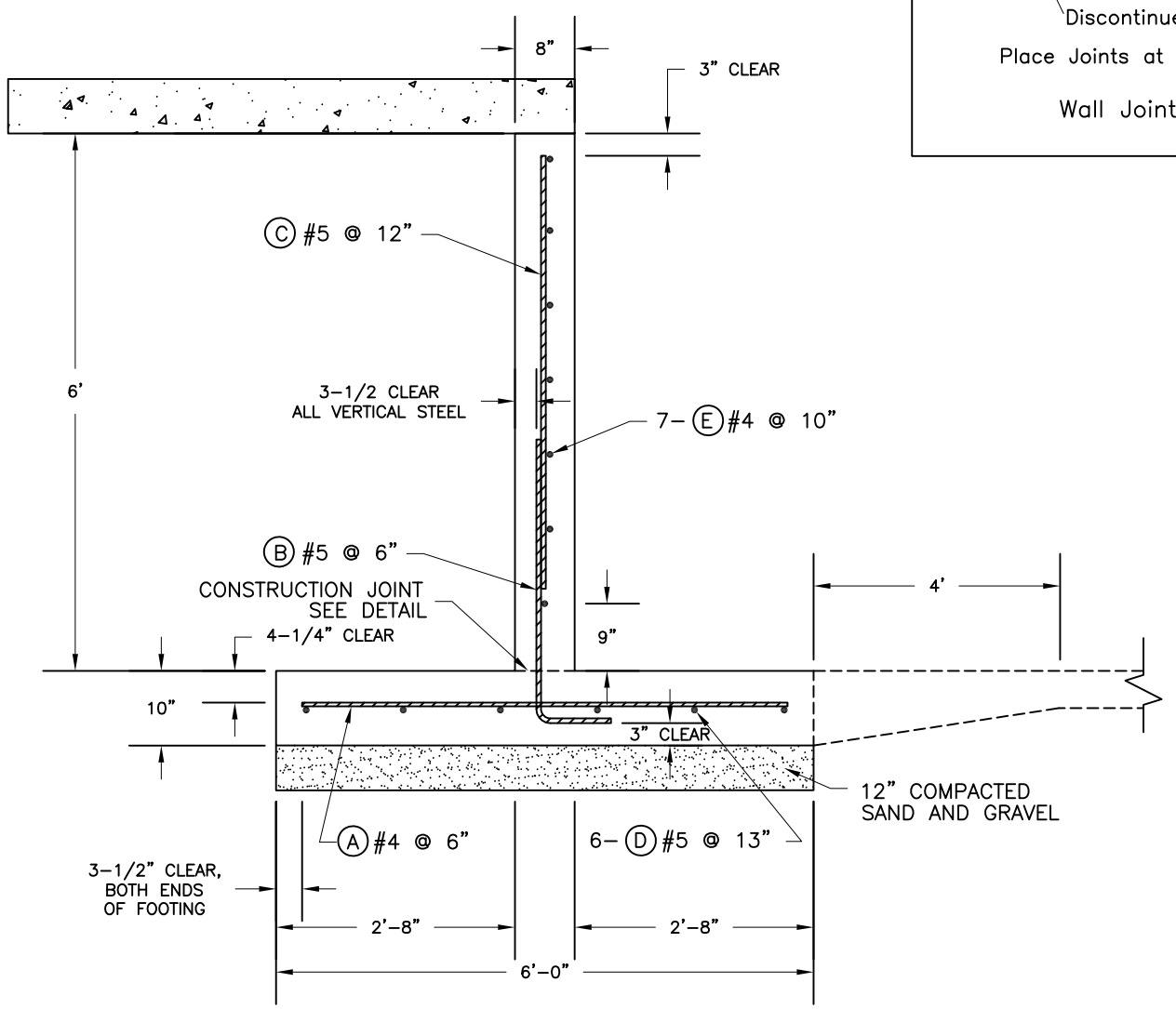

WALL SECTION

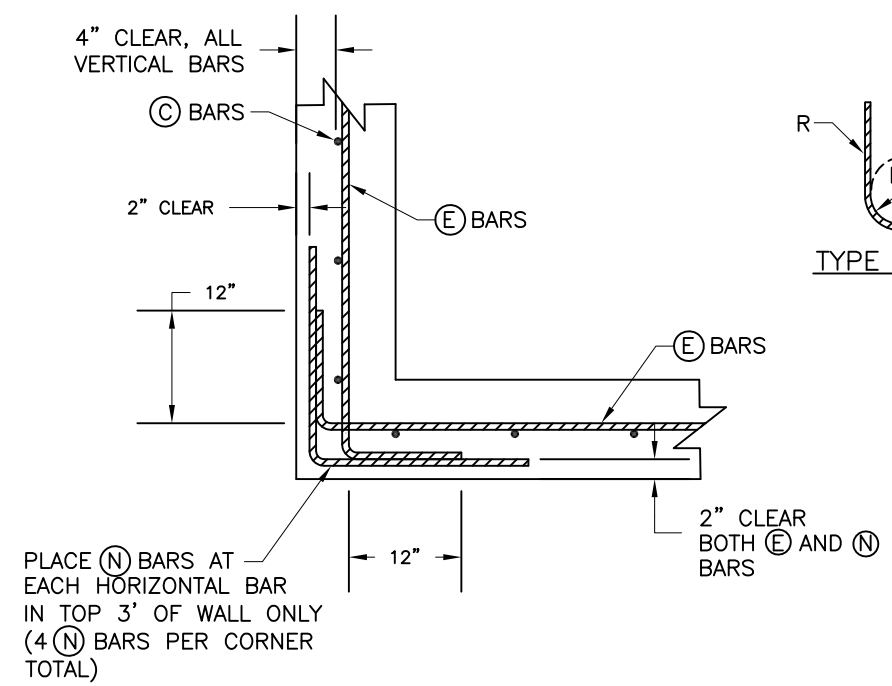

CORNER BAR SCHEMATIC

PLAN VIEW – TOP 3 FEET OF WALL SHOWN

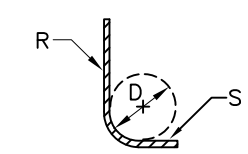

TYPE 2 BAR

CORNER NOTES

1. PLACE FIRST VERTICAL BAR AT WALL CORNER OR NO FURTHER THAN ONE–HALF BAR SPACING FROM THE INSIDE CORNER.
2. HOOK CAN BE SEPARATE FROM Ⓔ BARS, PROVIDED THAT MINIMUM LAP SPLICE OF 22" FOR #4 BARS IS MET.
3. SEE WALL SECTION FOR EXACT LOCATIONS OF Ⓒ AND Ⓔ BARS.

Not to Scale
Adapted from WI–563

Standard Design: Must be adapted to specific site

Date
Designed
Drawn
Checked
Approved

NRCS
Natural Resources Conservation Service
United States Department of Agriculture

File Name

Drawing Name
ME–ENG–W63

Sheet of