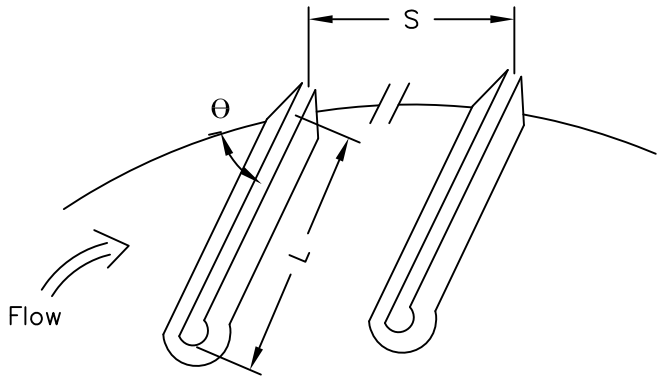

Plan

L = ____
S = ____(typically≤5L)
Θ = ____
W = ____
D_{50}= ____
H_w= ____(typically ⅓ to ½ Bankfull depth)
H_k= ____(typically 1.5x Bank height or 8' min.)

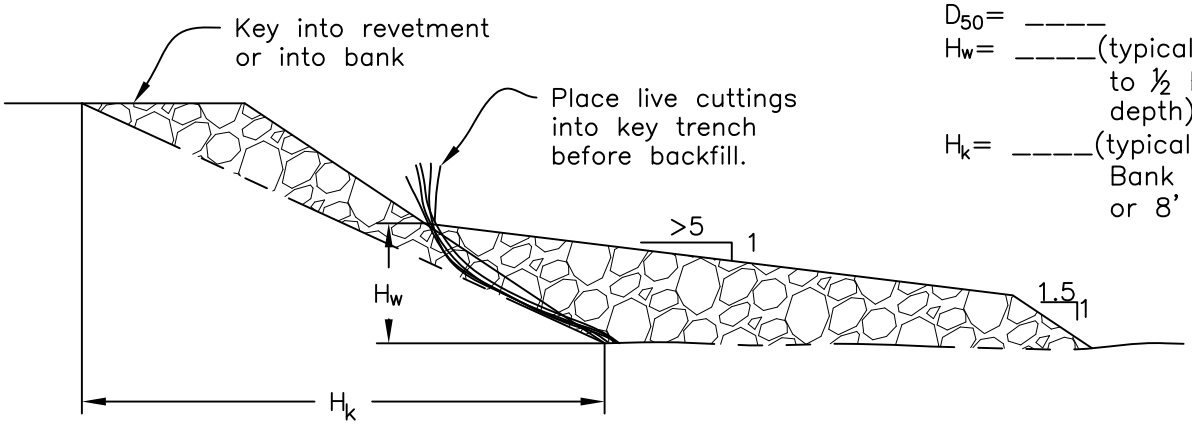

Elevation

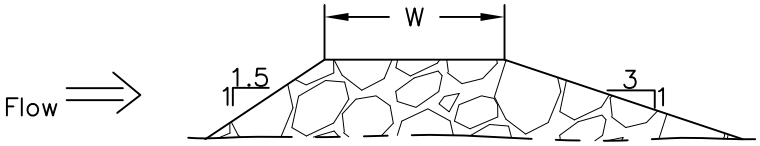

Section

Note: Extra rock is placed on downstream portion of barb sufficient to launch into scour and maintain weir design crest elevation, slope, and alignment.

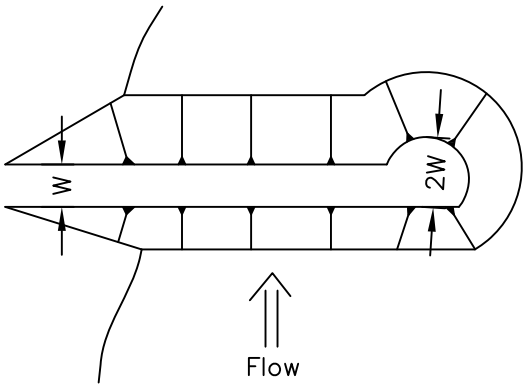

Plan

N.T.S.

NRCS
Natural Resources Conservation Service
United States Department of Agriculture

STREAM BARB - ERODABLE BED

Designed J. Fripp, K. Worster, Date 04/08
Drawn J. Renteria 04/08
Checked
Approved

File Name Stream_Barb_EB.dwg
Drawing Name Erodable Bed
04/09/08
Sheet of