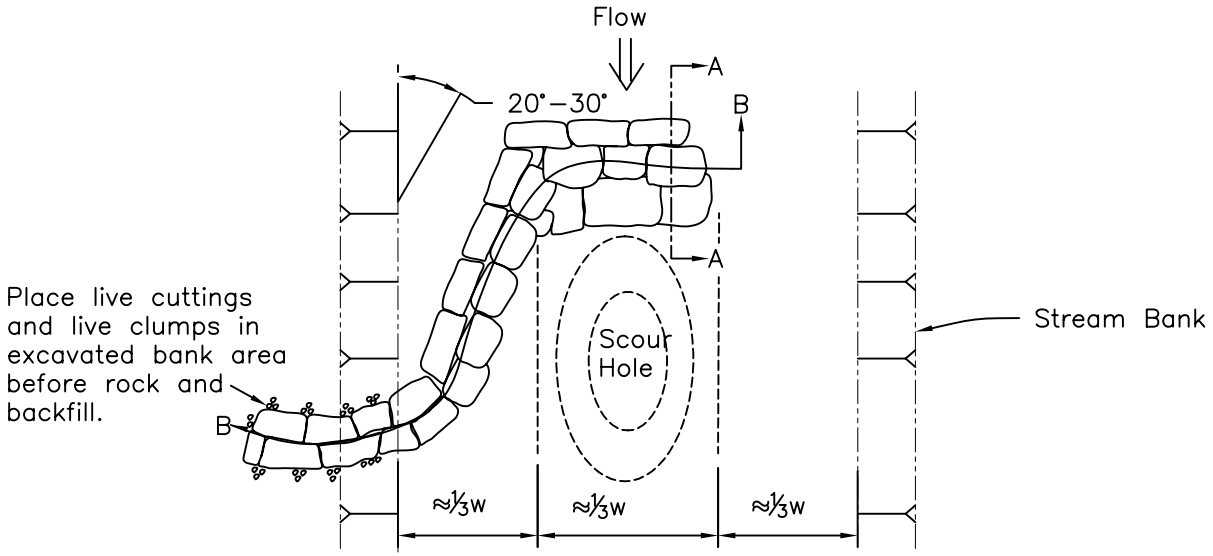

Hook Vane Plan

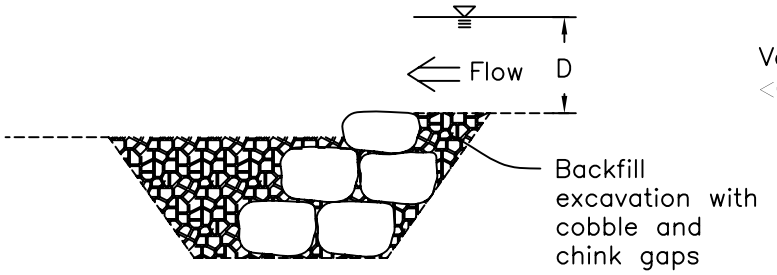

Rock Vane Section A

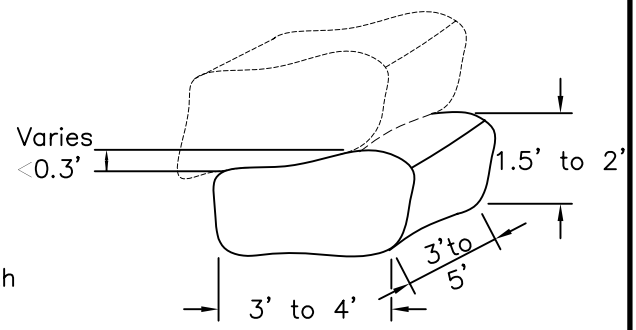

Typical Rock Dimensions and Placement (stone sized to be stable highest design discharge)

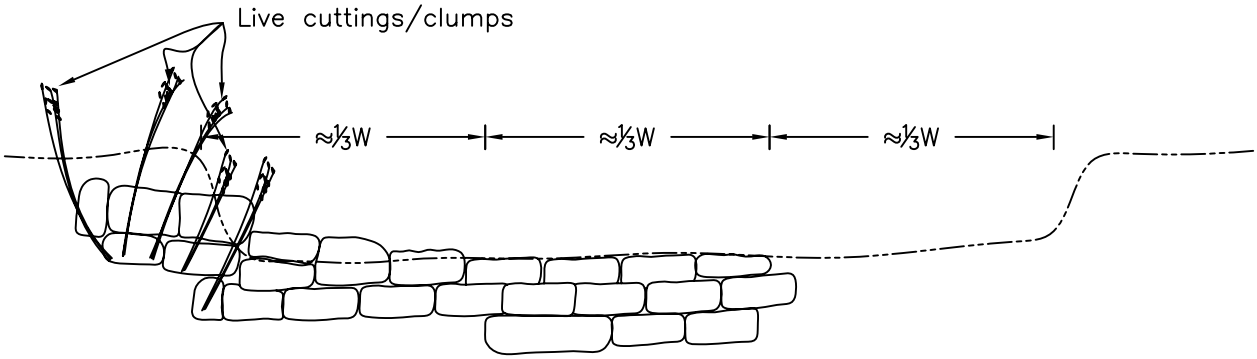

Section B

Notes: The rocks should be rectangular or nearly so at the rock to rock contact. The rock to rock contact should be solid. If rocks are not perfectly flat, the thicker end should be placed downstream.

Conceptual Plan - Not for Construction

N.T.S.

NRCS
Natural Resources Conservation Service
United States Department of Agriculture

Hook Vane

Designed	J. Fripp, K. Gullet, K. Robinson	Date 11/06
Drawn	J. Renteria	11/06
Checked		
Approved		

File Name HookVane.dwg

Drawing Name HookVane

06/06/07

Sheet of