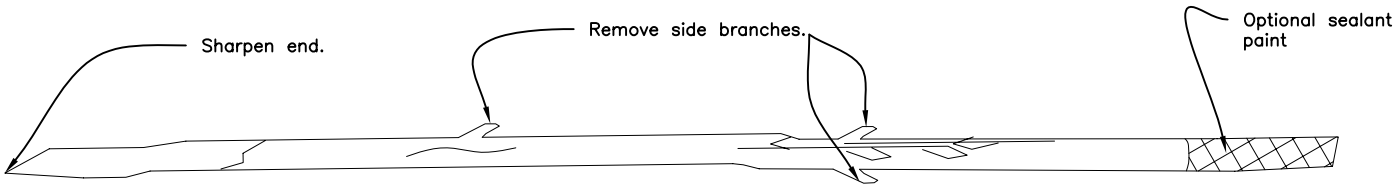

STEP 1

Obtain willow or willow type adventitiously rootable stock. Material should be from an area with similar soil, climate, and location relative to the stream. The material shall be at least two years old and free of disease, rot, or insect infestation. Material shall be harvested while dormant and soaked (1 to 14 days) before installation.

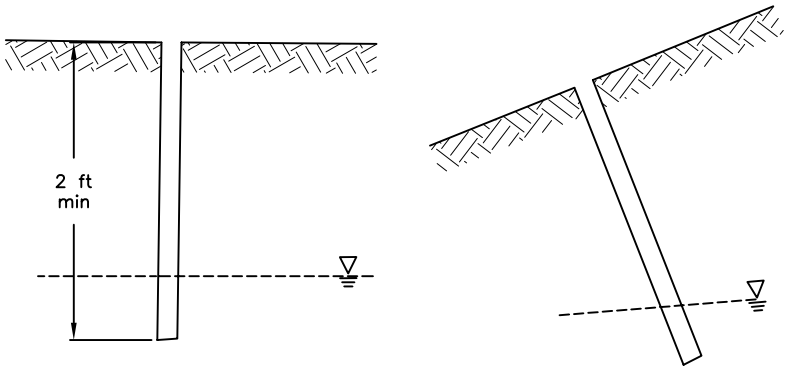

Note: A waterjet (hydrodrill) may be used to create the pilot hole in silt, loam, and some clay soils. It does not work well in large gravels and cobbles.

STEP 2

Create a pilot hole that is perpendicular to the ground surface and deep enough to reach the lowest water table of the year. The hole shall be ⅔ to ¾ the length of the live pole.

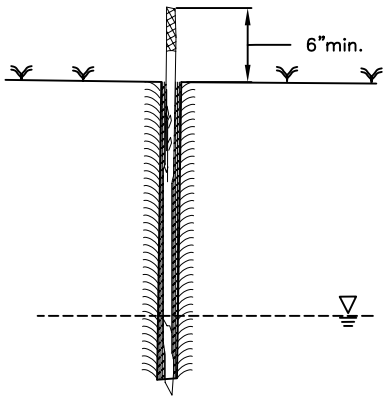

Note: If pilot hole is made with a water jet (hydro drill), backfilling with water soil slurry may not be necessary.

STEP 3

Tamp live poles into hole. Top of cutting shall be above competing vegetation. Back fill hole with water and soil mix to achieve good soil to stem contact. Space stakes in a 1 to 3 foot random pattern.

Conceptual Plan - Not for Construction

N.T.S.

NRCS
Natural Resources Conservation Service
United States Department of Agriculture

LIVE POLES
(Live Stakes)

Designed	J. Fripp, C. Hoag	Date 01/07	File Name LivePole.dwg
Drawn	J. Renteria	01/07	Drawing Name LivePole
Checked			05/31/07
Approved			Sheet of